PT Pericom Technology Inc.

Application Note

By Gui Xing Yun Mar, 2002

Application: Small RC cars using two batteries

PTI Device: PT8A977BP/978BLW

Introduction:

PT8A977BP/978BLW are a pair of 5_function encode/decode ICs designed for the small RC cars using two batteries. PT978BLW's low voltage feature is ideally suited to support two batteries solution without DC-to DC circuit in the cars.

Primary Benefits:

- Save DC to DC circuit in the receivers.
- Low cost
- High reliability
- Ideal RC distance

Small car using two batteries

Key Features:

- 977BP works as encoder
- 978BLW works as decoder
- Vcc: 2.5V to 5.0V (977BP)
- **Vcc: 2.0V to 5.0V (978BLW)**
- Auto-power-down (977BP)
  - Oscillation off
  - PC pin output low level
- On-chip oscillator with an external resistor
- Five functions

  Forward, Backward, Left, Right and Turbo
- Package:

  977BP: 14-pin DIP

  978BLW: 16-pin SOIC

By Gui Xing Yun Mar, 2002

PTI Solution

Transmitter circuit (Carrier frequency: 27.145KHz):

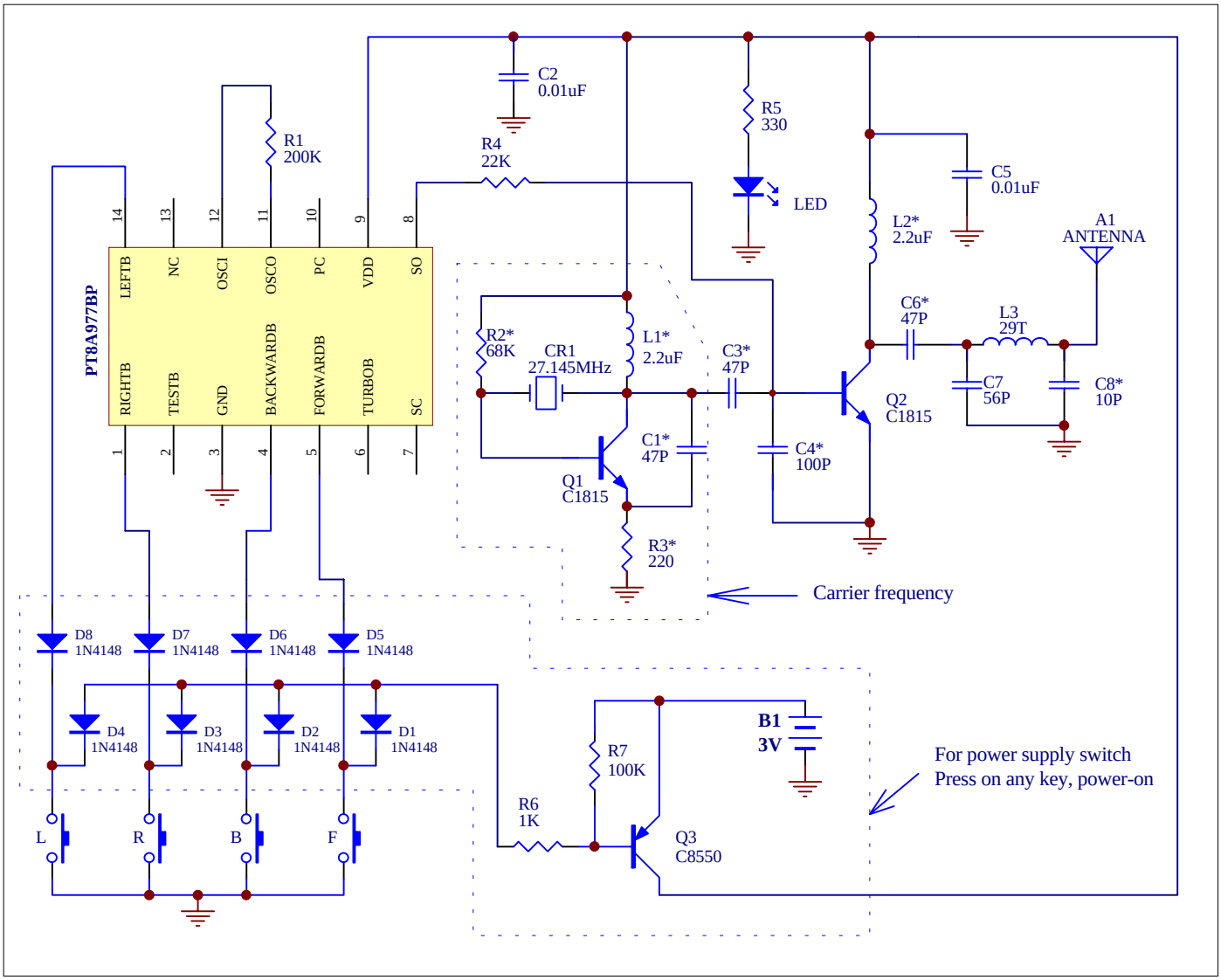

Notes:

1. When R1 is 200K, Oscillator frequency is about 128KHz.
2. "*" means components change for the different carrier frequency.
3. The circuit in dotted line can replace power supply switch. The circuit has two advantages:
   - Avoid forgetting power- off for children, save power.
   - When no any keys pressed, the carrier frequency oscillator doesn't work. The oscillator signal can not influence other equipments. The feature meets FCC standard.

By Gui Xing Yun Mar, 2002

List of transmitter material for the different carrier frequency:

	Carrier Frequency			
Designator	**Part**	**Part**	**Part**	**Part**
CR1 （Crystal）	27.145MHz	35.468MHz	40.680MHz	49.920MHz
R1	200K	200K	200K	200K
R2*	68K	68K	47K	39K
R3*	220Ω	100Ω	100Ω	100Ω
R4	22K	22K	22K	22K
R5	330Ω	330Ω	330Ω	330Ω
R6	1K	1K	1K	1K
R7	100K	100K	100K	100K
C1*	47P	33P	33P	15P
C2	0.01uF	0.01uF	0.01uF	0.01uF
C3*	47P	30P	30P	20P
C4*	100P	47P	47P	47P
C5	0.01uF	0.01uF	0.01uF	0.01uF
C6*	47P	33P	33P	33P
C7	56P	56P	56P	56P
C8*	10P	6P	5P	5P
D1~D8	1N4148	1N4148	1N4148	1N4148
Q1~Q2	C1815	C1815	C1815	C1815
Q3	C8550	C8550	C8550	C8550
L1*	2.2uH	1.0uH	1.0uH	1.0uH
L2*	2.2uH	1.0uH	1.0uH	1.0uH
L3*	29T	26T	19T	16T
LED	Φ5, Red	Φ5, Red	Φ5, Red	Φ5, Red

Note: L3 parameter: Line diameter 0.3mm. Backbone diameter is 5mm.

By Gui Xing Yun Mar, 2002

Receiver circuit (Carrier frequency: 27.145KHz):

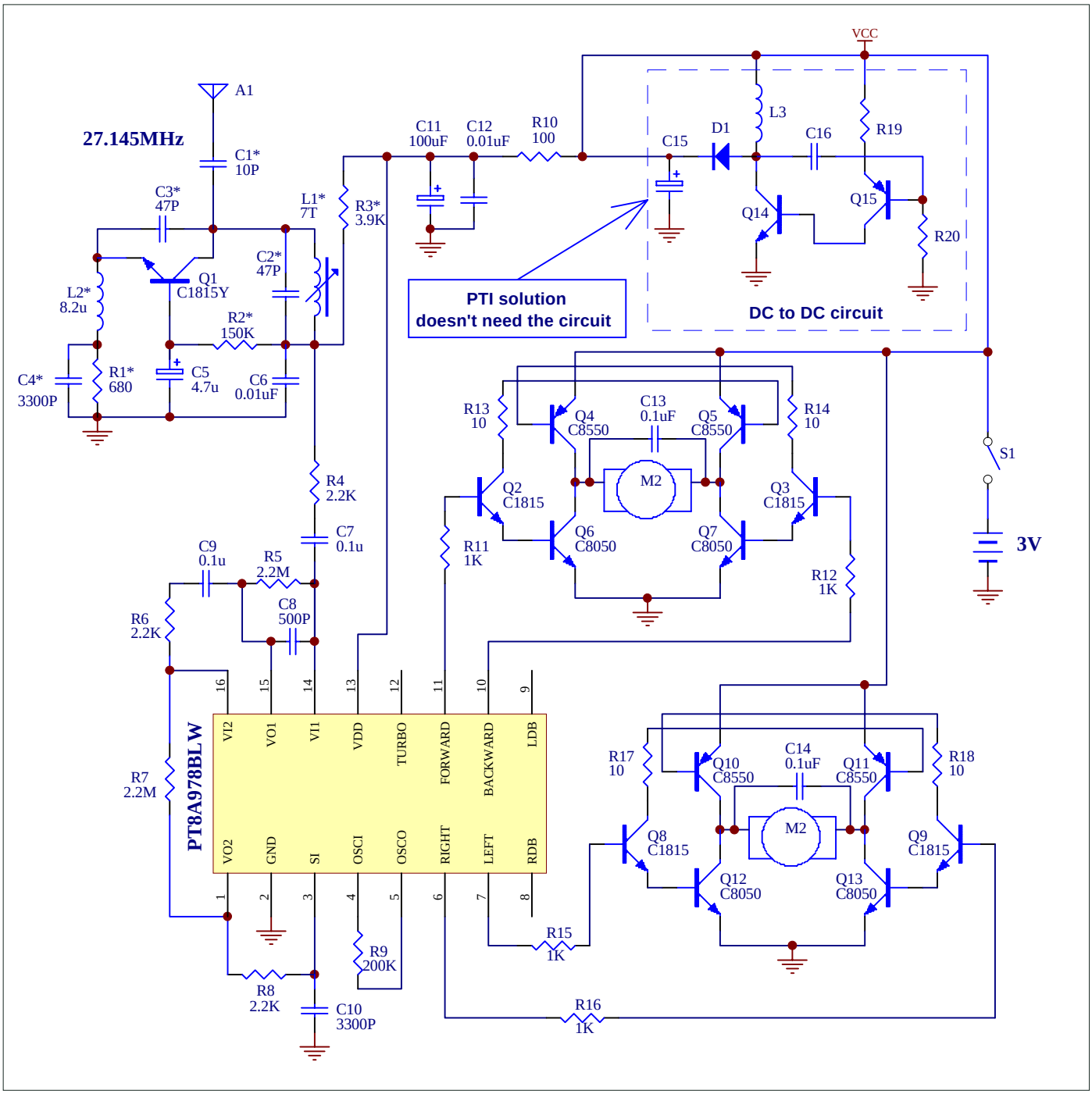

Notes:

1. "*" means components change for the different carrier frequency.
2. Doesn't need DC to DC circuit. Use 2 x AA or rechargeable batteries directly. Save eight components.

By Gui Xing Yun Mar, 2002

List of receiver material for the different carrier frequency:

	Carrier Frequency			
Designator	**Part**	**Part**	**Part**	**Part**
CR1 （Crystal）	27.145MHz	35.468MHz	40.680MHz	49.920MHz
R1*	680Ω	680Ω	820Ω	820Ω
R2*	150K	180K	180K	180K
R3*	3.9K	3.3K	3.3K	3.3K
R4, R6, R8	2.2K	2.2K	2.2K	2.2K
R5, R7	2.2M	2.2M	2.2M	2.2M
R9	200K	200K	200K	200K
R10	100Ω	100Ω	100Ω	100Ω
R11, R12, R15, R16	1K	1K	1K	1K
R13, R14, R17, R18	10Ω	10Ω	10Ω	10Ω
C1*	10P	8P	7P	5P
C2*	47P	39P	36P	25P
C3*	47P	30P	25P	10P
C4*	3300P	3300P	2200P	2200P
C5	4.7uF	4.7uF	4.7uF	4.7uF
C6, C12	0.01uF	0.01uF	0.01uF	0.01uF
C7, C9, C13, C14	0.1uF	0.1uF	0.1uF	0.1uF
Q1	C1815Y	C1815Y	C1815Y	C1815Y
Q2, Q3, Q8, Q9	C1815	C1815	C1815	C1815
Q4, Q5, Q10, Q11	C8550	C8550	C8550	C8550
Q6, Q7, Q12, Q13	C8050	C8050	C8050	C8050
L1*	7T	7T	5T	5T
L2*	8.2uH	3.3uH	3.3uH	3.3uH

Note: L1 parameter: Line diameter 0.3mm. Backbone diameter is 5mm.